SAND2006-4157 C

Addition of Secondary System Modules and a Graphical User Interface into MELCOR-H2—Phase 1

Sal B. Rodriguez, Randy Cole*, Katherine McFadden*, Randall O. Gauntt*, Fred Gelbard*, Len Malczynski*, Billy Martin*, Shripad T. Revankar**, Karen Vierow**, Dave Louie***, Louis Archuleta***, Mohamed El-Genk****, and Jean Paul Tournier*****

P.O. Box 5800, MS 0748, Albuquerque, NM 87185-0748, sbrodri@sandia.gov

*Sandia National Laboratories**

*Purdue University**, Omicron, Inc.***, University of New Mexico*****

MELCOR is a world-class nuclear reactor safety analysis code employed by over 50 entities world wide, including the US Nuclear Regulatory Commission (NRC). MELCOR-H2 is an extended version of MELCOR designed to dynamically simulate detailed models of nuclear reactors that are fully-coupled with modular secondary-system components and thermochemical cycles for the production of hydrogen and electricity.

We recently added new modules into MELCOR-H2 for the steady-state and transient simulation of secondary-system components such as compressors, turbines, process connection points, and heat exchangers, including the intermediate heat exchanger (IHX) (see Figure 1). For Phase 1, which was implemented during FY06, we added thermodynamic secondary components into MELCOR-H2. For Phase 2, we will add more advanced thermalhydraulic models. We expect to add the Phase 2 models during FY07.

Because of the modular nature of the MELCOR-H2 secondary-system components, they can be arranged in a manner that helps optimize hydrogen and electrical production; that is, the components can be placed in series, parallel, interconnected, and duplicated as desired by the designer/analyst. Figure 2 shows a more elaborate plant; it is similar to the layout being considered by the Japanese for GTHTR300C. For this paper, we will evaluate its potential for safe operation under normal and abnormal conditions.

The MELCOR and MELCOR-H2 output can now be displayed with a real-time, interactive graphical user interface (GUI). The GUI allows the analyst/designer to visualize the system's transient variables and display them on the screen in real time. If desired, the analyst/designer may change input during a simulation to see how the calculated parameters respond, as shown in Figure 3. This upgrade makes MELCOR-H2 a very effective tool for the maximization of hydrogen via nuclear/thermochemical plants.

*Sandia is a multiprogram laboratory operated by Sandia Corporation, a Lockheed Martin Company, for the United States Department of Energy's National Nuclear Security Administration under Contract DE-AC04-94AL85000.

Future versions of MELCOR-H2 will incorporate more advanced thermalhydraulic secondary-system models, and will include process modules for distillation and separation.

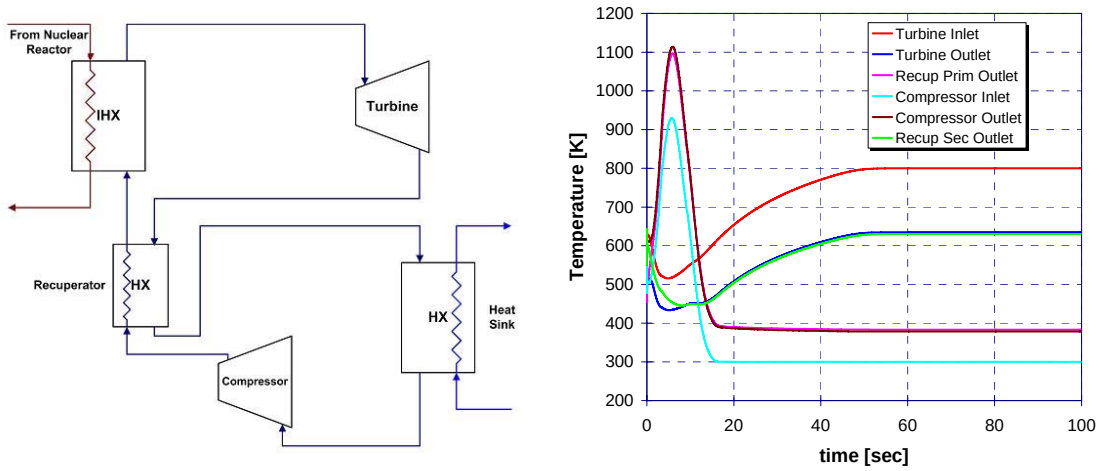

Fig. 1. Schematic of a Basic Secondary System and Selected Component Transient Temperature.

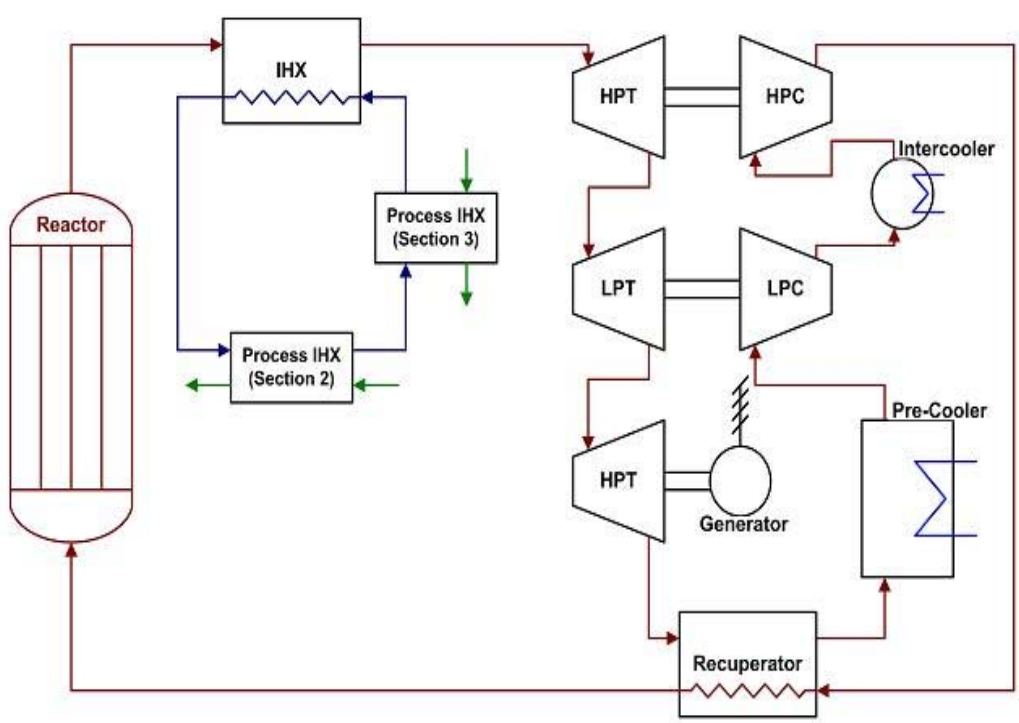

Fig. 2. Direct Closed Brayton Cycle with Series Feed.

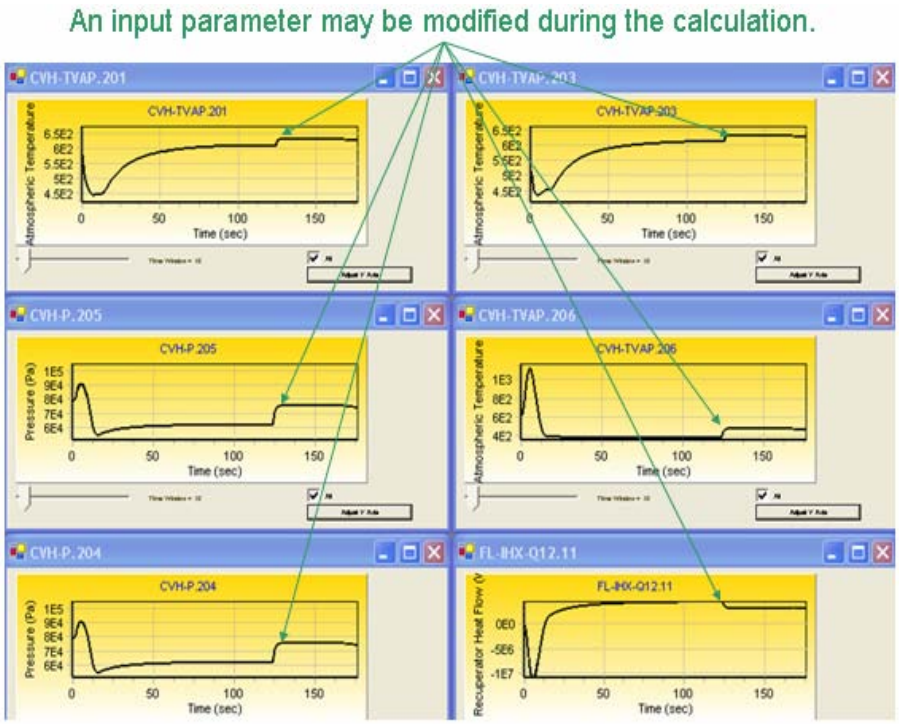

Fig. 3. Snapshot of MELCOR-H2 Real-Time, Interactive GUI.